Politecnico di Milano
MSc Course - MEMS and Microsensors - 2023/2024

E06
Harmonic Oscillator Design

Giacomo Langfelder
giacomo.langfelder@polimi.it

18/10/2023

Problem

You work in the analog division of a MEMS company. You are asked to design an electronic oscillator whose frequency-selective element is a MEMS resonator. Its parameters are listed in Table 1. The minimum capacitance of the chosen circuit process is 200 fF.

	Symbol	Value
Resonance frequency	f_0	32768 Hz
Mass	m	0.8 nKg
Process thickness	h	15 μm
Gap	g	1.8 μm
Q-factor @ room temperature (300 K)	Q_0	2000
Number of comb-finger structures	N_{CF}	70
Rotor DC voltage	V_{DC}	5 V
Circuit supply voltage	$\pm V_{DD}$	$\pm$ 3.3 V
Temperature operating range	ΔT	$-45°$ C to $+85°$ C

Table 1: Electro-mechanical parameters of the MEMS resonator.

1. Calculate the maximum equivalent resistance, $R_{eq,max}$, of the resonator, considering the dependence of the quality factor on temperature.

2. Size the charge-amplifier-based front-end, used to readout the motional current.
3. An additional stage is needed to close the loop, considering a target displacement amplitude of the proof frame, $x_{a,max}$, of 2 μm: describe and size such a stage.
4. Finally, another stage is required to satisfy Barkhausen criteria at resonance: describe it, choose where to place it, and size it.

Introduction

Reference oscillators are ubiquitous in almost any electronic system and constitute a multi-billion $ market in electronics industry. Oscillators are used for a wide range of applications including real-time tracking, clocking of logic circuits and digital data transmission, and frequency up- and down-conversion in RF transceivers. For mainstream consumer applications, two technologies are distinguished: electromechanical and electrical oscillators. An emerging class of electromechanical oscillators is based on MEMS technology: the extraordinary small size, high Q factor, low cost and high volume MEMS manufacturing open wide chances for miniature-scale precision oscillators at low cost.

An oscillator consists of a frequency-selective element, which is the electromechanical resonator, and a gaining element, which is the feedback circuit. The interface between resonator and sustaining amplifier accommodates the transfer of electrical into mechanical energy and vice-versa. The signal of an ideal oscillator is a perfect harmonic: whether it is a sine wave or a square wave, it can be fully described with its fundamental harmonic,

$$v_o(t) = A \cdot \sin(\omega_o t),$$

where A is the oscillation amplitude, and ω_o is the oscillation frequency. An oscillator needs to fulfill two oscillation criteria in order to enable and sustain a stable oscillation. The magnitude of the open loop gain, G, at the oscillation frequency ω_o should equal unity, while the phase shift across the loop should equal a multiple of 360°:

$$|G(\omega_o)| = 1, \qquad \angle G(\omega_o) = 360°.$$

The loop gain is defined by the combined transfer of the resonator and the sustaining amplifier. It therefore depends on the amplifier topology. In practice, the loop gain is designed to be larger than unity at the start-up, so that random noise components at resonance begin to be amplified, each time around the loop. The amplitude increases until the output runs into some limiting factors, such as the power supply voltage. Output saturation reduces the effective amplifier gain, so that the loop gain matches unity.

Question 1

The resonator Q-factor is an important parameter for the performance of an oscillator. It can be defined, from energy considerations, as the ratio of the energy stored in the resonator, E_{stored} (in the equivalent inductance and capacitance), and the energy dissipated

by damping (so, by the equivalent resistance) during one resonant period, E_{diss}:

$$Q = 2\pi \frac{E_{stored}}{E_{diss}} = 2\pi \frac{1/2 \cdot L_{eq} I^2 \cdot 2}{1/f_0 \cdot R_{eq} I^2} = \omega_0 \frac{m}{b}$$

A high Q indicates a low rate of energy loss relative to the stored energy of the resonator. In other words, the higher is Q, the lower is the energy that has to be provided to the structure to sustain its oscillation. High Q-factors result thus in low resonator motional impedance, since R_m is inversely proportional to Q. Low resonator impedance allows easier oscillator design to meet the Barkhausen conditions.

Given ω_0 and m, the Q-factor depends on the damping coefficient, b. At the pressure p at which MEMS resonators are usually packaged (10 mbar, or lower), the most relevant dissipative phenomenon is air damping, where energy loss is caused by collisions between gas molecules and the structure. Intuitively, damping is thus proportional to the *density of gas molecules* n_{mol} and to their *thermal velocity* v_{mol}. Their dependence on temperature is easily found from (i) the ideal gas law and (ii) thermal agitation:

$$p \cdot V = n_{mol} \cdot R \cdot T \rightarrow n_{mol} \propto \frac{p}{k_B T}$$

$$\frac{1}{2} m \cdot v_{mol}^2 = \frac{1}{2} k_B \cdot T \rightarrow v_{mol} \propto \sqrt{k_B \cdot T}$$

As the package is hermetic, the volume inside the package is constant; hence, pressure is itself proportional to temperature, and the final dependence of the damping coefficient on temperature becomes:

$$b \propto v_{mol} \cdot n_{mol} = \frac{p}{k_B T} \cdot \sqrt{k_B \cdot T} \propto \sqrt{T}$$

And we thus approximate the Q factor dependence as an inverse square root law:

$$Q\left(T\right) = \alpha \frac{1}{\sqrt{T}} \qquad \rightarrow \qquad Q\left(T\right)\sqrt{T} = \alpha$$

where α is a coefficient that depends on the parameters of the resonator. As shown in Fig. 1, this approximation is valid for a wide temperature range around 300 K.
As we learned in previous classes, the equivalent resistance of the resonator, R_m, is directly proportional to the damping coefficient, b, hence inversely proportional to Q:

$$R_m = \frac{b}{\eta^2} = \frac{1}{\eta^2} \frac{\omega_0 m}{Q}.$$

The maximum value $R_{m,max}$ is found when the Q-factor is the minimum, which, in turn, is found at the maximum temperature T_{max} = 273 K + 85 K = 358 K:

$$Q(T_{max}) = Q(T_{room}) \cdot \sqrt{\frac{T_{room}}{T_{max}}} = Q_{min} = 1831$$

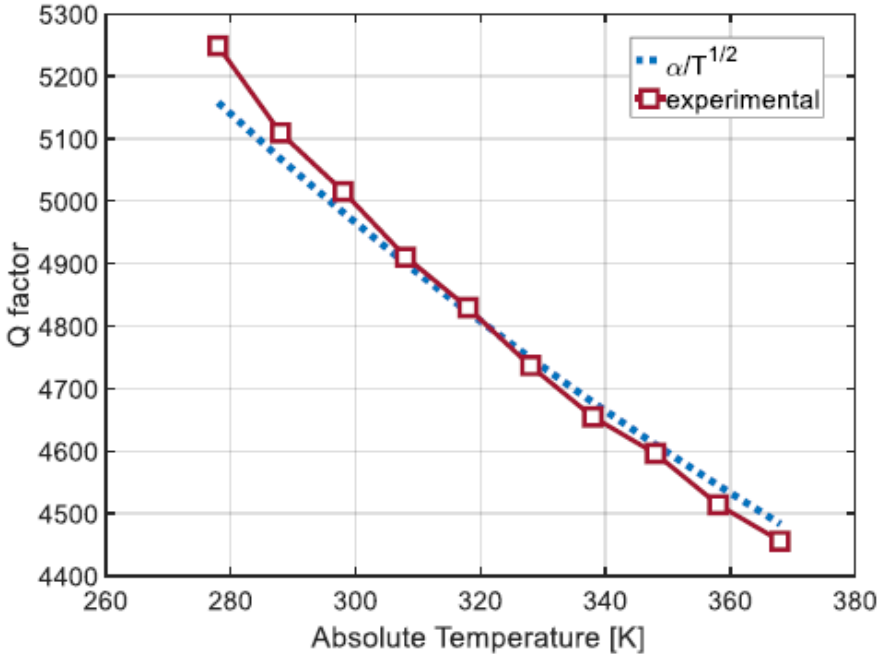

Figure 1: Model and experimental measurement of the dependence of the quality factor on temperature.

With the calculated minimum Q value, we can evaluate the maximum equivalent resistance of the resonator. First of all, we evaluate the damping coefficient:

$$b_{max} = \frac{2\pi f_0 m}{Q_{min}} = 90 \cdot 10^{-9}\,\mathrm{N/(m/s)}.$$

We can finally calculate the capacitance variation per unit displacement of the resonator, the transduction coefficient, and thus the maximum equivalent resistance:

$$\frac{\partial C}{\partial x} = \frac{2\epsilon_0 h N_{CF}}{g} = 10\,\mathrm{fF}/\mu\mathrm{m}, \qquad \eta = V_{DC}\frac{\partial C}{\partial x} = 51 \cdot 10^{-9}\,\mathrm{VF/m}.$$

$$R_{m,max} = \frac{b_{max}}{\eta^2} = 33.8\,\mathrm{M\Omega}.$$

This is a typical motional resistance value for MEMS resonators in the 10-100 kHz range. If Barkausen criteria are fulfilled in this worst case, they are then always satisfied.

Question 2

Before sizing the charge amplifier (CA), we evaluate the reason to choose a CA front-end rather than a trans-resistance amplifier (TRA). The role of the front-end is to read out

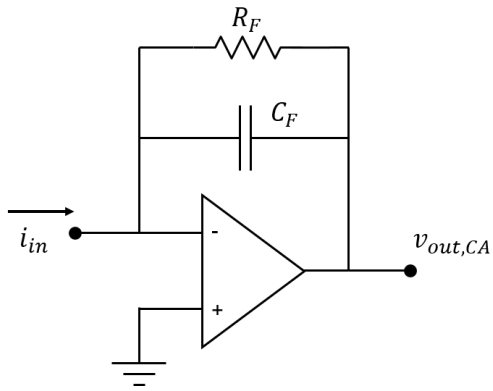

Figure 2: Generic topology of the front-end stage that reads out the motional current flowing through the sense electrode of a MEMS structure.

the motional current and to translate it into a voltage, so that the loop can be closed to the actuation electrode, which delivers the voltage to compensate for mechanical losses, ensuring stable oscillation. The motional current is a sine wave,

$$i_m(t) = i_{ma} \sin(\omega_0 t),$$

and we need to design the circuit in such a way that the oscillation frequency effectively matches the resonance frequency, ω_0.
The circuit topology is the same for the two cases, as you can see in Fig. 2. Its transfer function from input current to output voltage is evaluated as:

$$T(s) = \frac{V_{out}(s)}{I_{in}(s)} = -\left(R_F \parallel \frac{1}{sC_F}\right) = -\frac{R_F}{1 + sC_F R_F}$$

In a trans-resistance amplifier (TRA), the feedback is dominated by the resistance. This means that the pole of the feedback network must be at least a decade *after* the operating frequency, which, in our case, is the resonator resonance:

$$\omega_F = \frac{1}{R_F C_F} \gg \omega_o,$$

and the transfer function of the amplifier at resonance can be approximated as

$$T_{TRA}(j\omega)|_{\omega \approx \omega_o} = \left.\frac{V_{out}(j\omega)}{I_{in}(j\omega)}\right|_{\omega \approx \omega_o} \simeq R_F$$

With this architecture, the working frequency falls within the *plateau* of the Bode modulus diagram, shown in Fig. 3 together with the phase shift, for different R_F values.
On the other hand, with a CA architecture, the feedback impedance at resonance is dominated by the capacitance. This means that the circuit pole is at least a decade *before* the working frequency,

$$\omega_F = \frac{1}{R_F C_F} \ll \omega_o,$$

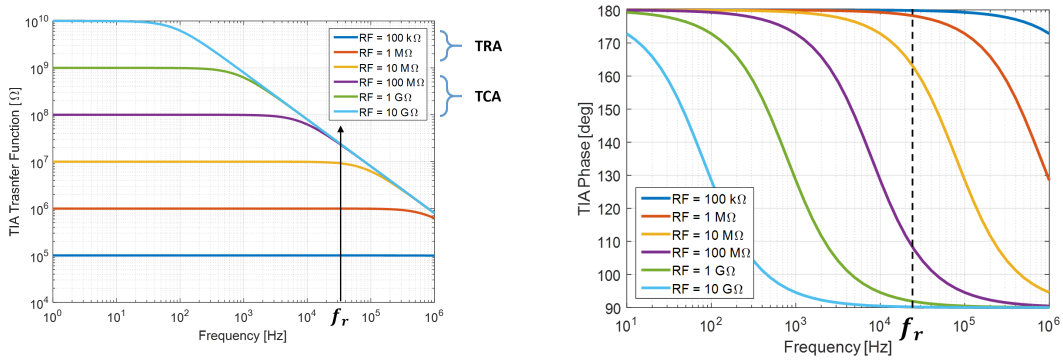

Figure 3: Bode plot of the front-end electronics as the feedback resistance changes. The feedback capacitance is kept constant at 200 fF.

and the transfer function, around ω_o, is

$$T_{CA}\left(j\omega\right)|_{\omega\approx\omega_o} = \left.\frac{V_{out}\left(j\omega\right)}{I_{in}\left(j\omega\right)}\right|_{\omega\approx\omega_o} \simeq \frac{1}{j\omega C_F}.$$

Why should we choose the CA? To provide an answer, let us discuss the effect of the feedback resistance noise on the circuit. The expression of the signal-to-noise-density ratio of this circuit can be evaluated as:

$$SNR_d = \frac{v_{out}}{\sqrt{S_{n,V,out}\left(\omega_o\right)}} = \frac{i_{ma}\left|Z_F\left(\omega_o\right)\right|}{\sqrt{\frac{4k_BT}{R_F}\left|Z_F\left(\omega_o\right)\right|^2}} = \frac{i_{ma}\sqrt{R_F}}{\sqrt{4k_BT}}.$$

The SNR is proportional to the square root of the feedback resistance, and it is independent of the feedback capacitance. The higher the resistance R_F, the better. As you can see in Fig. 3, the highest values of resistance are found when the circuit operates as a CA. The message is that *with a CA front-end one can make the feedback resistor noise negligible with respect to other noise sources, e.g., thermomechanical noise of the resonator and amplifier noises.*

In addition, when you choose a TRA, you cannot independently choose the SNR and the gain, as they both depend on R_F; on the other hand, with a CA, you can independently set the SNR and the gain, as the latter depends only on C_F.

For these reasons, the CA topology is often preferable. The capacitance shall be set as low as possible, so to maximize the signal amplitude at the output node. In this exercise, the capacitance value C_F is limited by technological constraints to 200 fF.

In order to make the circuit operate as a charge amplifier, the feedback pole has to be at least a decade below the operating frequency. A charge amplifier with such a pole position, however, introduces a residual phase shift:

$$\angle G_{CA} = \angle T\left(j2\pi f_o\right) = 180^\circ - \tan^{-1}\left(\frac{f_o}{f_{pole}}\right) = 95.7^\circ.$$

With a one-decade split between pole frequency and operating frequency, the deviation from the theoretical value of 90° is not negligible (almost 6°). A two-decade gap (corresponding to $R_F = 2.43$ GΩ) leads to a more acceptable 90.6° phase shift. We then choose a 2.43-GΩ R_F, that guarantees both a higher SNR and a more accurate phase shift between input current and output voltage.

Once the charge amplifier is chosen, we can calculate its gain, in order to check if it is enough to compensate the resonator losses. The CA gain at f_0 is

$$G_{CA} = |T_{CA}(j2\pi f_o)| = \frac{1}{2\pi f_o C_F} = 24.3\ \mathrm{M\Omega}.$$

This gain is lower than the value of the maximum motional resistance. This means that the CA on its own is not able to compensate for mechanical losses. In other words, if we decided to close the loop by connecting the output of the CA directly with the actuation electrode we would have a loop gain of:

$$G_{loop} = \frac{G_{CA}}{R_{m,max}} = 0.71,$$

which is lower than 1. The circuit would not have enough gain to enable and sustain the oscillation: we need to add at least another stage after the CA. In our example, we will choose a non-inverting hard-limiter (or comparator), with its threshold set to ground. In this way the sinusoidal signal at the output of the charge amplifier saturates to positive and negative voltage supplies as it crosses the ground potential, generating at the comparator output a square wave with an amplitude that goes from $+V_{DD}$ to $-V_{DD}$. With the insertion of the hard-limiter, assuming its small-signal gain to be 1000 (G_{HL}), the loop gain turns out to be much higher than 1 at the start-up:

$$G_{eln} = G_{CA} \cdot G_{HL} > R_{m,max}.$$

The oscillator designed up to now is shown in Fig. 4.

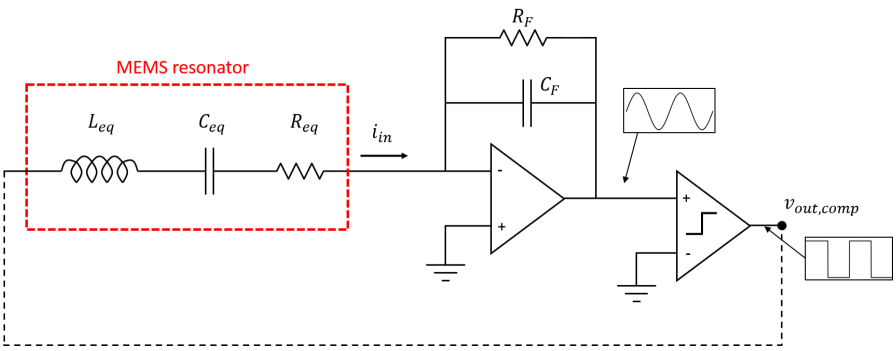

Figure 4: The circuit we designed up to now: equivalent RLC circuit of the resonator, the CA and the hard-limiter.

Question 3

Unfortunately, the signal at the output of the hard-limiter cannot be used to directly drive the resonator, because a voltage wave with such an amplitude would violate the small-signal hypothesis of the linear model:

$$\frac{v_a}{4} \ll V_{DC}.$$

A high ac amplitude would also cause a proof mass motion which may be too large; indeed, we were asked not to exceed a maximum displacement of 2 μm.
It is thus necessary to reduce the waveform amplitude at the hard-limiter output. The square-wave shape of the wave can be maintained, as the MEMS itself will filter all high-order odd harmonics of the signal. It is thus possible to implement a de-gain stage in its simplest form: a voltage divider. We now evaluate the voltage amplitude value that, worst-case, causes the proof mass to move by $x_{a,max}$. The transfer function between force and displacement for the MEMS resonator at resonance is

$$\frac{X\left(j\omega_0\right)}{F\left(j\omega_0\right)} = \frac{Q}{k} \quad \rightarrow \quad x_a = \frac{Q}{k}F_a = \frac{Q}{k}\eta v_a$$

Remember that, in the last equation, v_a is the amplitude of the sinusoidal voltage that is applied to the actuation electrode. If the actuation voltage is a square wave, we should consider only the amplitude of the first harmonic, as other harmonics will be filtered out by the MEMS transfer function (see Fig. 5). Remember that a square wave, $x_{sq}\left(t\right)$, which switches from $+V$ to $-V$, can be written as

$$x_{sq} = \frac{4}{\pi}V\left[\sin\left(2\pi f_o t\right) + \frac{1}{3}\sin\left(6\pi f_o t\right) + \frac{1}{5}\sin\left(10\pi f_o t\right) + \frac{1}{7}\sin\left(14\pi f_o t\right) + \cdots\right].$$

Given a fixed actuation voltage amplitude, the displacement amplitude, x_a, is maximum when the Q-factor is maximum. Recalling the relationship between Q and T, the maximum value of Q is evaluated for the minimum value in the temperature range, $T_{min} =$ 273 K $-$ 45 K $=$ 228 K:

$$Q(T_{min}) = Q_{max} = Q(T_{room}) \cdot \sqrt{\frac{T_{room}}{T_{min}}} = 2294$$

By dimensioning the actuation voltage for this worst-case situation, we are guaranteeing that, if the temperature increases, Q-factor is reduced, and the displacement is reduced, i.e., we will never exceed the maximum allowable displacement of 2 μm.
The stiffness of the device, k, can be easily calculated as

$$k = \left(2\pi f_0\right)^2 m = 33.9\,\mathrm{N/m},$$

independent of Q variations. Once both the maximum quality factor and the spring stiffness are known, we can size the ac voltage that should be delivered to the resonator:

$$v_a = \frac{x_{a,max}k}{Q_{max}\eta} = 573\,\mathrm{mV},$$

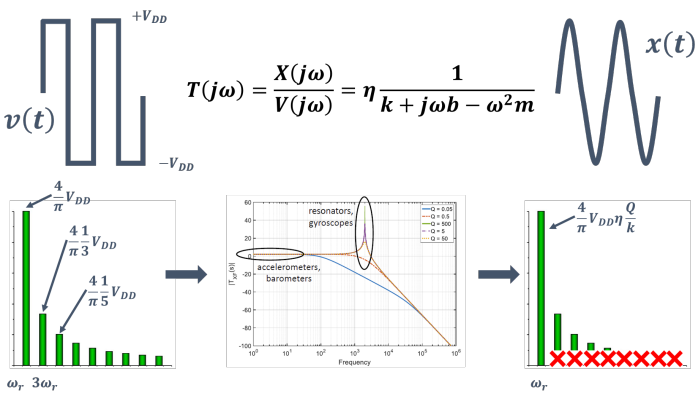

Figure 5: Square-wave driving effect.

which corresponds to a square-wave whose amplitude is

$$v_{a,sq} = \frac{v_a}{\frac{4}{\pi}} = 449 \text{ mV}.$$

With these numbers, the small-signal condition is now satisfied: $\frac{v_a}{4} \ll V_{DC}$. Once the signal amplitude has been calculated, we have to size the voltage divider in order to obtain the desired signal amplitude. The gain of the stage has to be:

$$G_{DG} = \frac{v_{a,sq}}{V_{DD}} = 0.14$$

By arbitrarily choosing one of the two resistors, $R_{DG,1}$, to be equal to 10 kΩ, the value of the other resistor, $R_{DG,2}$, turns out to be

$$R_{DG,2} = R_{DG,1}\frac{1 - G_{DG}}{G_{DG}} = 63.4\,\text{k}\Omega.$$

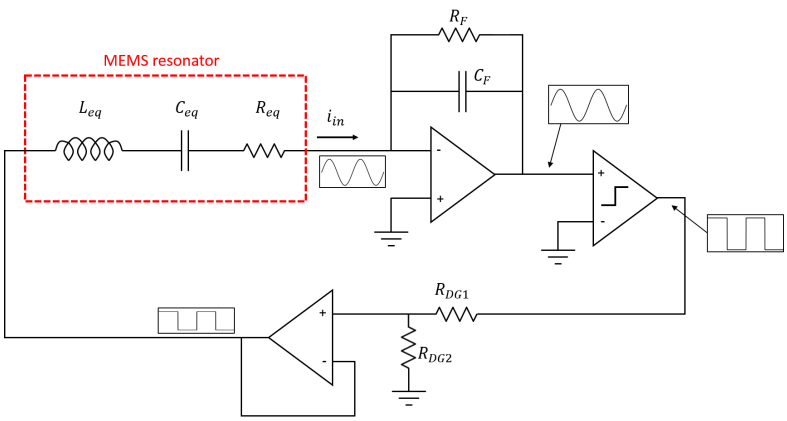

Figure 6: The circuit we designed up to now: equivalent RLC circuit of the resonator, the CA, the hard-limiter, the de-gain stage and the buffer.

After this de-gain stage it may be appropriate to put a buffer stage, in order to drive the MEMS with a low impedance driver. The circuit designed so far is shown in Fig. 6.

Question 4

The Barkhausen criterium on magnitude is satisfied thanks to the non-linear hard-limiter behavior, which makes it much greater than 1 at the start-up. But what about the phase shift? Let us cut the loop at the actuation node. As shown in Fig. 7, at resonance the MEMS is a pure resistor, that does not change the phase of the input signal. The charge amplifier stage, being inverting and being an integrator, introduces a phase shift of 90°: the comparator is a non-inverting stage and it does not introduce a phase lag, and so does the de-gain one. In conclusion, a voltage signal at resonance comes to the end of the loop with a phase shift of 90°. The Barkhausen criterion on the phase of the loop gain is thus not satisfied! In this condition, the circuit cannot oscillate!

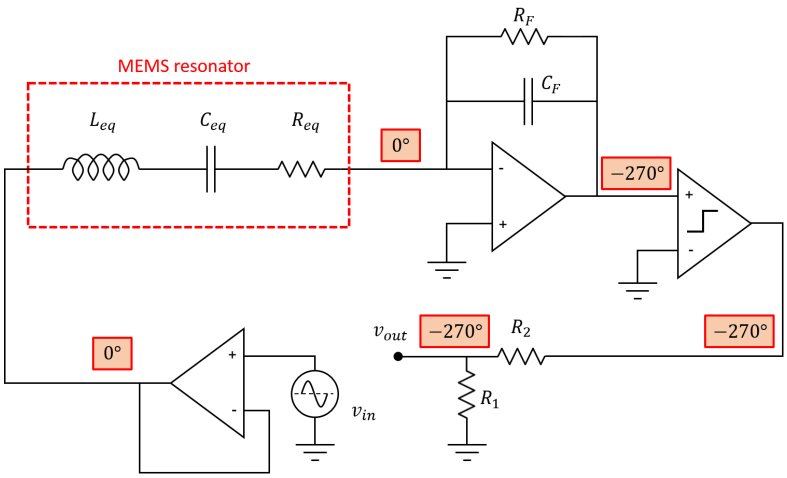

Figure 7: Phase shift analysis on the oscillator.

We therefore need another stage that introduces an additional −90° phase shift in the loop. A stage that can provide such an output is an inverting differentiator, as shown in Fig. 8.

Where to place it? A good solution is to place it right after the front-end, where the oscillation is still a sinewave. If we decided to place it after the comparator or de-gain stage, we would differentiate a square-wave, i.e., we would obtain impulsive spikes (not really a desired condition).

The transfer function of a differentiator like the one shown in Fig. 8 is

$$T_{DIF}(s) = \frac{V_{out,DIF}(s)}{V_{in,DIF}(s)} = -\frac{sC_1R_2}{(1+sC_1R_1)(1+sC_2R_2)}.$$

If properly dimensioned, the stage introduces one zero in the origin, that is exactly what we want, and two poles at higher frequencies. In this case the derivative of the sinusoidal input wave is again a sinusoidal wave, but with a phase shift of −90°: −180° due to the inverting nature of the stage, and 90° due to the zero in the origin, as shown in Fig. 9.

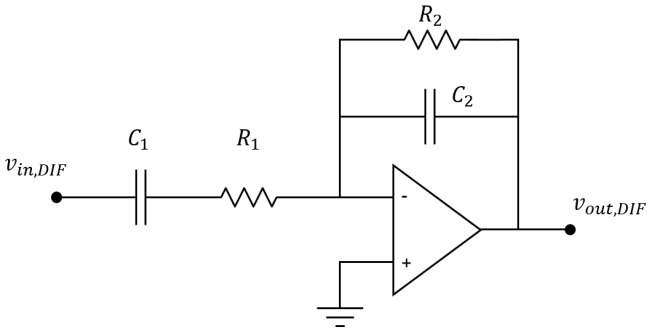

Figure 8: Topology of the differentiating stage.

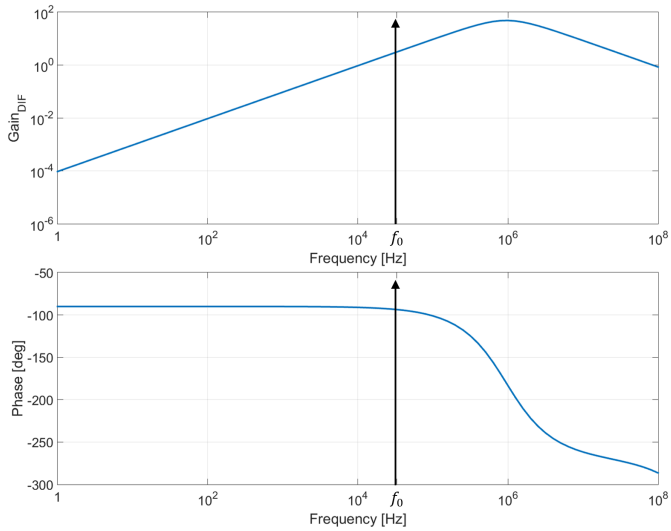

Figure 9: Bode diagrams of magnitude and phase of the differentiator.

We have now to dimension the components in a way that the two poles introduced by the stage are at least two decades after the resonance frequency of the device, such that the introduced phase shift is (almost) exactly $-90°$. In addition, it is convenient to fix the gain of the stage at resonance, $G_{DIF} = |T_{DIF}(j\omega_o)|$, to be equal to 1. Essentially we have three equations (the gain and the two poles) and four unknowns. So, one of them has to be reasonably selected with no specific constraints. Arbitrarily choosing a feedback resistance, R_2, of 100 kΩ, the input capacitance, C_1, turns out to be

$$G_{DIF} = 2\pi f_0 C_1 R_2 = 1 \quad \rightarrow \quad C_1 = \frac{1}{2\pi f_0 R_2} = 48\,\text{pF}.$$

From the requirements on the pole frequencies, we can dimension the remaining components. Note that the two pole frequencies are not required to be the same, but there is no reason to put them at different ones. By choosing $f_{p,DIF} = 3.2$ MHz as the poles

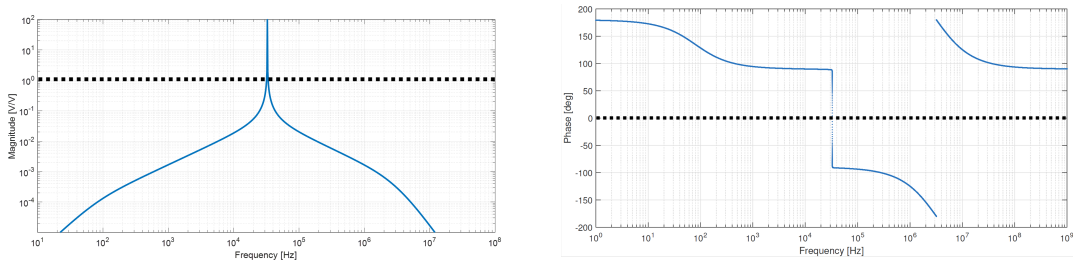

Figure 10: Loop gain magnitude and phase.

frequency, sizing of the remaining components is easy:

$$C_2 = \frac{1}{2\pi f_{p,DIF} R_2} \simeq 0.5\,\text{pF}, \qquad R_1 = \frac{1}{2\pi f_{p,DIF} C_1} \simeq 1\,\text{k}\Omega.$$

With the so dimensioned differentiating stage, the design of the oscillator is now complete: both Barkhausen criteria are now satisfied. Figure 10 reports magnitude and phase of the loop gain. Figure 11 shows the schematic of our complete circuit.
Note that the magnitude of the loop gain at resonance can be predicted as

$$G_{loop} = |T_{loop}(j2\pi f_o)| = \frac{1}{R_m} G_{CA} G_{DIFF} G_{HL} G_{DG} \simeq 100,$$

that corresponds to the peak value of Fig. 10.

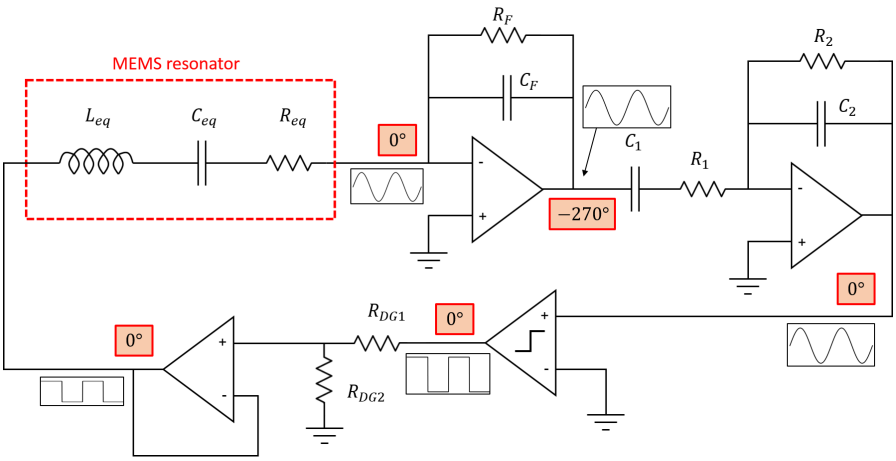

Figure 11: Complete schematic of the oscillator.